THIS DRAWING IS UNPUBLISHED. RELEASED FOR PUBLICATION -,- .
© COPYRIGHT - BY TYCO ELECTRONICS CORPORATION. ALL RIGHTS RESERVED.

LOC	DIST
CM	0

REVISIONS

P	LTR	DESCRIPTION	DATE	DWN	APVD
	R	ECO-07-012897	26JUN07	KW	DB

1. MATERIAL:
   CONNECTOR: POLYESTER UL94V-0 (WHITE).
   CONTACTS: 0.30 [.012] THK COPPER ALLOY.
2. CONTACT ACCEPT #24 AWG WIRE WITH 2.41 [.095] MAXIMUM INSULATION DIAMETER.
3. CONNECTOR MATES WITH 1.57±0.20[.062±.008] THICK PC BOARD.
4. HOUSING FEATURES: CLOSED END, STANDARD MOUTH WITHOUT MOUNTING EARS.
5. CONTACT FINISH: BRIGHT TIN-LEAD 0.00203[.000080] MIN THK.
6. CONTACT FINISH: MATTE WHISKER MITIGATED TIN 0.00203[.000080] MIN THICKNESS OVER NICKEL UNDERPLATE.

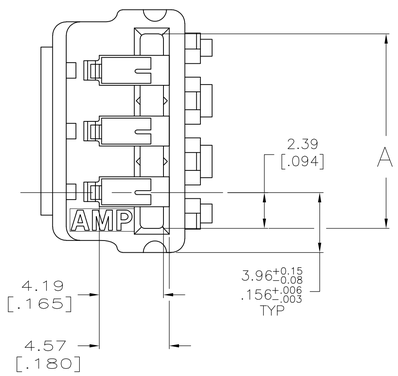

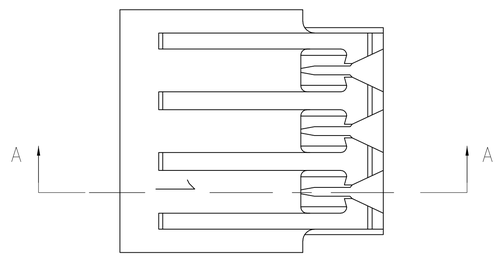

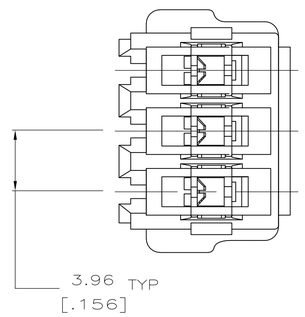

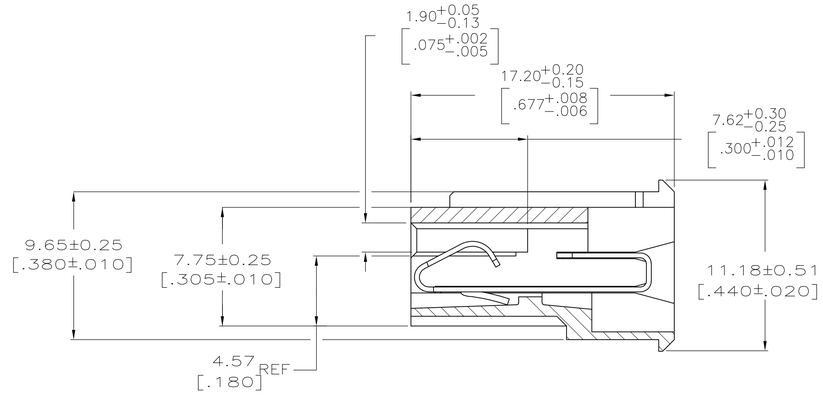

SECTION A-A

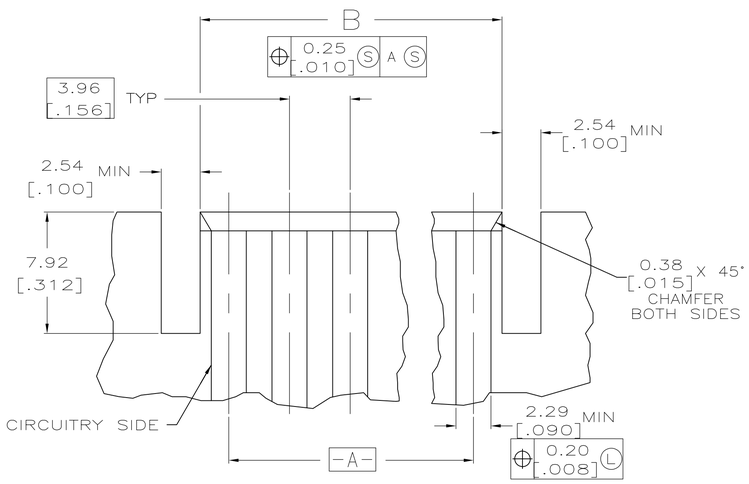

RECOMMENDED P.C. BOARD LAYOUT

6	95.50 [3.760]	95.91 [3.776]	24	5-640862-4
	91.54 [3.604]	91.95 [3.620]	23	5-640862-3
	87.58 [3.448]	87.99 [3.464]	22	5-640862-2
	83.62 [3.292]	84.02 [3.308]	21	5-640862-1
	79.65 [3.136]	80.06 [3.152]	20	5-640862-0
	71.73 [2.824]	72.14 [2.840]	18	4-640862-8
	59.84 [2.356]	60.25 [2.372]	15	4-640862-5
	47.96 [1.888]	48.36 [1.904]	12	4-640862-2
	36.07 [1.420]	36.47 [1.436]	9	3-640862-9
	24.18 [.952]	24.59 [.968]	6	3-640862-6
	12.29 [.484]	12.70 [.500]	3	3-640862-3
5	95.50 [3.760]	95.91 [3.776]	24	2-640862-4
	91.54 [3.604]	91.95 [3.620]	23	2-640862-3
	87.58 [3.448]	87.99 [3.464]	22	2-640862-2
	83.62 [3.292]	84.02 [3.308]	21	2-640862-1
	79.65 [3.136]	80.06 [3.152]	20	2-640862-0
	71.73 [2.824]	72.14 [2.840]	18	1-640862-8
	59.84 [2.356]	60.25 [2.372]	15	1-640862-5
	47.96 [1.888]	48.36 [1.904]	12	1-640862-2
	36.07 [1.420]	36.47 [1.436]	9	640862-9
	24.18 [.952]	24.59 [.968]	6	640862-6
	12.29 [.484]	12.70 [.500]	3	640862-3
CONTACT FINISH	B	A	NO. OF CIRCUITS	PART NUMBER

THIS DRAWING IS A CONTROLLED DOCUMENT.

DIMENSIONS: mm [INCHES]

TOLERANCES UNLESS OTHERWISE SPECIFIED:
0 PLC ± -
1 PLC ± -
2 PLC ± 0.13 [.005]
3 PLC ± -
4 PLC ± -
ANGLES ± -

MATERIAL: SEE NOTE 1
FINISH: SEE NOTE 1

DWN K. SALMON 10-23-91
CHK R. SWING 10-23-91
APVD -
PRODUCT SPEC -
APPLICATION SPEC -
WEIGHT -

Tyco Electronics
Tyco Electronics Corporation
Harrisburg, Pa 17105-3608

NAME: MTA-156 CARD EDGE CONNECTOR ASSEMBLY, 24 AWG

SIZE A1 | CAGE CODE 00779 | DRAWING NO C-640862 | RESTRICTED TO -

CUSTOMER DRAWING | SCALE 5:1 | SHEET 1 OF 1 | REV R

METRIC